L5190FT-325 Same as Above Except with Straight Serrated Hose End

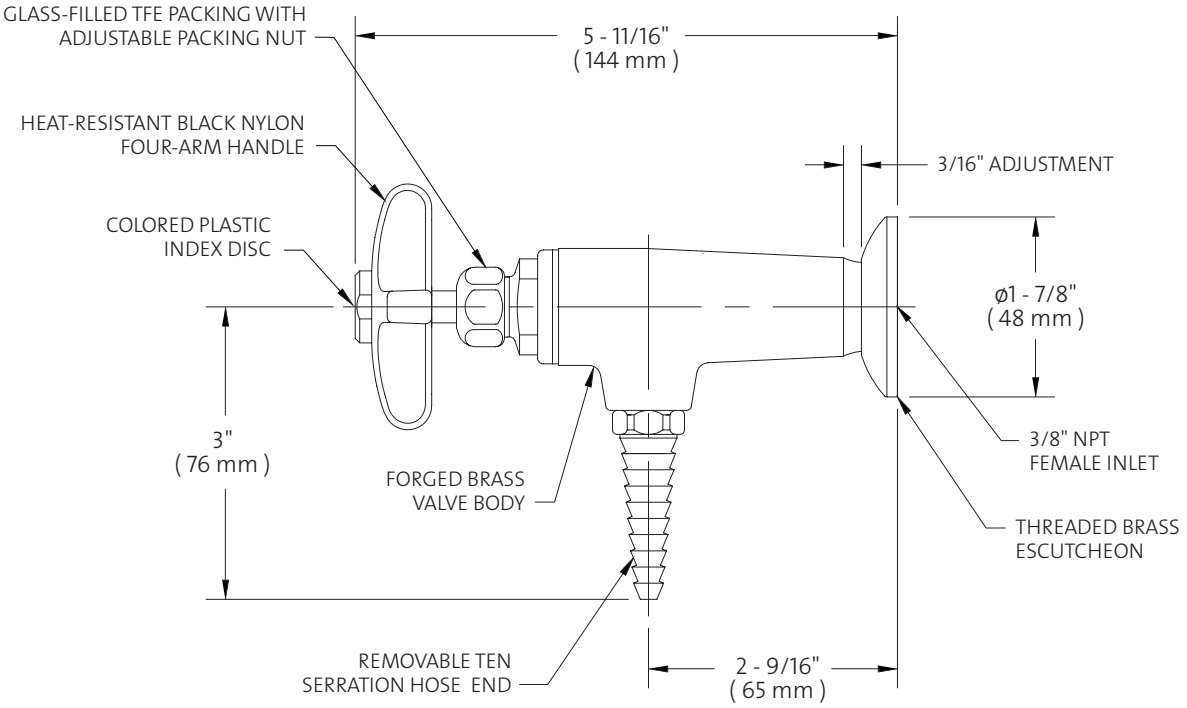

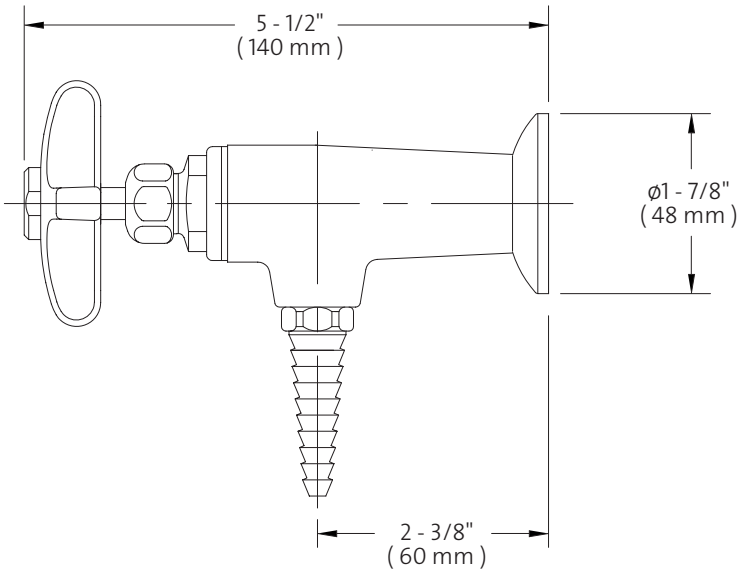

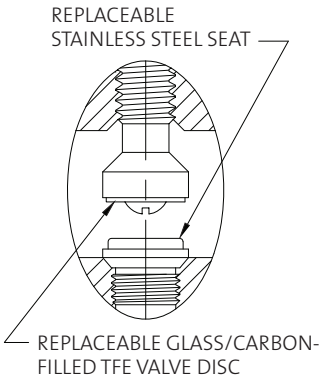

NOTE:

1. FIXTURE IS FULLY ASSEMBLED AND FACTORY TESTED AT 100 PSI AIR PRESSURE. MAXIMUM WORKING PRESSURE OF VALVE IS 20 PSI SATURATED STEAM.

© 2008 / WaterSaver Faucet Co.

Measurements may vary ± 1/4".

WaterSaver Faucet Co.
701 West Erie Street
Chicago, IL 60654

312 666 5500 TELEPHONE
312 666 5501 FACSIMILE
wsflab.com